Starlite High Bay

The Starlite LED High Bay offers a differentiated outlook design, unique heat dissipation methodology, excellent lighting efficiency and a high stability LED luminaire engineered to be an ideal fixture for your Environment. The fitting can be used in industrial and logistic facilities, warehouses, supermarkets, shopping centres, and many more applications.

Applying a unique fan shape design for the reflection lens, makes the lighting effect softer and more evenly distributed. One other optional feature is it can be equipped with a lighting regulator from 0-10 step control analogue /PWM and can be connected with a microwave sensor making the fitting as energy efficient as possible.

Specification

Product Code	MGSTL90M	MGSTL110M	MGSTL130M	MGSTL150W
Wattage	90W	110W	130W	150W
Lumens	10800	13200	15600	18000
CCT	4000K, 5000K, 6000K			
Beam Angles	45°, 110° PMMA			
Power Factor	0.94			
CRI	>80			
Driver	MEANWELL			
Operating Voltage	100-277V, 50/60Hz			
Operating Temperature	-30°C to +50°C			
IP Rating	IP65			
Housing	Aluminium			
Finish	Black Powder Coating			
Warranty	5 years			

Dimensions

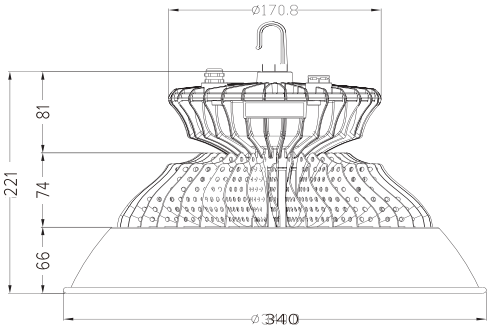

MG Lites Energy Saving Solutions

MG Lites Energy Saving Solutions Ltd
4 Denaby Lane Industrial Estate, Coalpit Road, Doncaster, DN12 4LH
Tel: 01709 864841 Fax: 01709 480591 Website: www.mglites.com