Mini Wall Pack

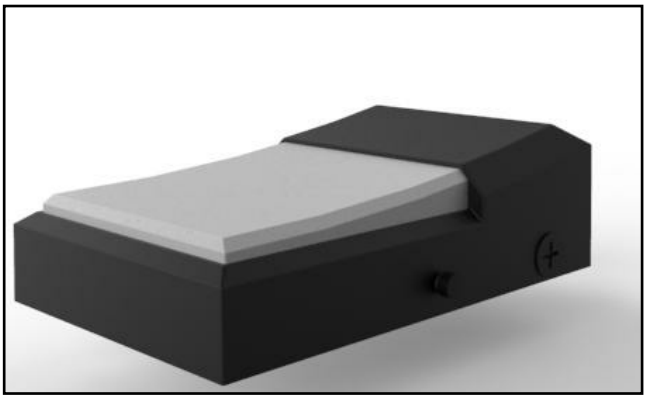

The new Mini Wall Pack is ideally suited for entrance lighting, courtyards, hotels and other external applications.

Specification

Product Code	MG-MWP13W	MG-MWP20W
Wattage	13W	20W
Lumens	1000-1200lm	1600-1700lm
CCT	2700-6500K	
CRI	>80	
Viewing Angle	110°	
Input Voltage	100-277V AC 50/60Hz	
Power Factor	>0.88	
IP Rating	IP65	
Operating Temperature	-20°C to 45°C	
Optional Extra	Photocell	
Housing	Aluminium	
Housing Colour	Black	
Warranty	5 years	

Dimensions

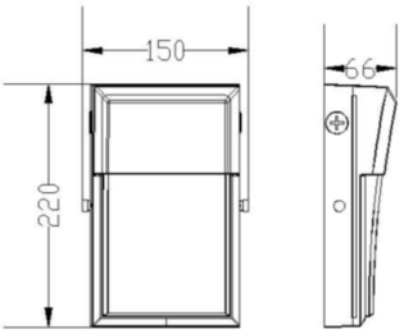

13W

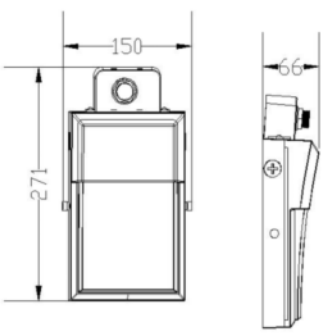

20W

MG Lites Energy Saving Solutions Ltd
4 Denaby Lane Industrial Estate, Coalpit Road, Doncaster, DN12 4LH
Tel: 01709 864841 Fax: 01709 480591 Website: www.mglites.com