GEN3 Mini Wall Pack

The new updated Gen3 Wall Pack is ideal for entrance lighting, courtyards and outdoor landscaped areas.

Specification

Product Code	MG-WPG320W	MG-WPG330W
Wattage	20W	30W
Lumens per watt	125/135 lm/W	
Dimensions	216x147x78mm	
Colour Temperature	4000K, 4500K, 5000K, 5700K	
Viewing Angle	100°	
Input Voltage	100-277V AC 50/60Hz	
Operating Temperature	-20°C to +45°C	
Housing	Aluminium	
Housing colour options	Black, Brown, White	
Optional Extra	Photocell	
IP Rating	IP65	
Warranty	5 years	

Dimensions

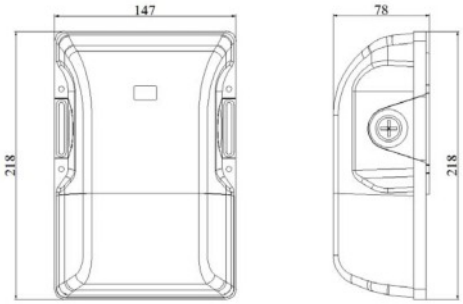

MG Lites Energy Saving Solutions

MG Lites Energy Saving Solutions Ltd
4 Denaby Lane Industrial Estate, Coalpit Road, Doncaster, DN12 4LH
Tel: 01709 864841 Fax: 01709 480591 Website: www.mglites.com